Supmea

Headquarters

5th floor, Building 4, Singapore Hangzhou Science Technology Park, No. 6 street, Hangzhou Economic Development Area, Hangzhou 310018, China

Singapore

2 Venture Drive #11-30 Vision Exchange Singapore

info@ supmea. com

www.supmea.com

Supmea Automation Co.,Ltd.

Compact Electromagnetic Flowmeter

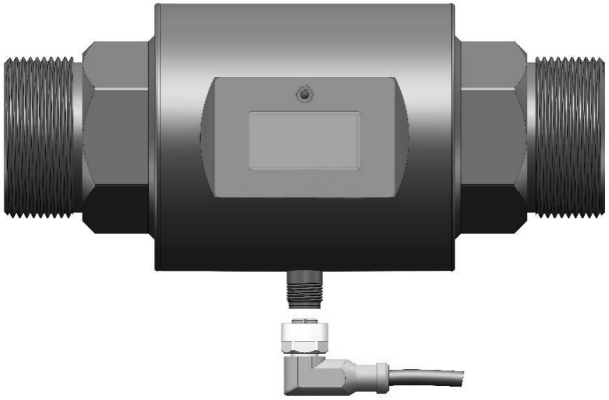

Preface

Thank you for purchasing this electromagnetic flowmeter. To ensure proper operation and prevent potential losses due to improper use, please read this manual thoroughly before using the device.

Note

- The contents of this manual are subject to change without notice due to real-time factors such as function upgrading.
- We strive to ensure the accuracy of the manual. Nevertheless, if you identify any errors or inaccuracies, please contact us.
- Unauthorized reprinting or copying of this manual is strictly prohibited.

Version

U-SUP-FMX240-EN10

Safety Precautions

For the safe operation of this product, please strictly follow the outlined safety precautions.

About this manual

- Please ensure the instrument operators have a careful reading of this manual.
- Prior to operation, please study this manual in detail to ensure a thorough comprehension of the device's functionality.
- This manual only describes the product's functions. The responsibility as to the device 's suitability for any specific purpose lies solely in the operator.

Precautions for product protection, safety, and modification

- For your safety and the normal operation of the product and its controlling systems, the guidelines and precautions specified in this manual are supposed to be fully observed. Operating the instrument in ways not specified in this manual may compromise its protective features. Our company shall not be liable for any malfunctions or accidents resulting from non-compliance with the precautions described.
- When equipped the product and its controlling systems with lightning protection or separate safety protection circuits, it needs to be implemented by other devices.
- If you need to replace components or fittings of the product, please use the model specified by the company.
- This product is not designed for use in systems directly related to personal safety, such as nuclear power facilities, radioactive equipment, railway systems, aviation equipment, marine equipment, and medical equipment. If applied, it is the user's responsibility to implement additional equipment or systems to ensure personal safety.
- Do not modify this product.
- The following safety symbols are used in this manual:

Hazard: Failure to take appropriate precautions may result in serious personal injury, product damage, or major property loss.

Warning: Pay special attention to critical information related to the product or specific sections of this user manual.

- Confirm whether the supply voltage is consistent with the rated voltage before operation.
- Do not use the instrument in a flammable and combustible or steam area.
- To prevent electric shock and operation errors, ensure proper grounding protection is in place.
- Thunder prevention engineering facilities must be well managed: the shared grounding network shall be grounded at the correct electric level, shielded, with wires properly routed, and an SPD surge protector applied as needed.
- Some internal components may carry high voltage. To avoid the risk of electric shock, do not open the front square panel unless it is being handled by trained personnel or maintenance staff authorized by our company.
- To avoid electric shock, disconnect the power before performing any checks.
- Check the condition of the terminal screws regularly. If loose, please tighten them before use.
- Unauthorized disassembly, modification, or repair of the product is not allowed, as it may lead to malfunctions, electric shock, or fire hazards.
- Wipe the product with a dry cotton cloth. Do not use alcohol, benzine, or other organic solvents, and avoid exposing the product to any liquids. If the product falls into the water, please cut off the power immediately to prevent leakage, electric shock, or fire hazards.

- Please check the grounding protection regularly. Do not operate the product if you think that the protection, such as grounding protection and fuses, is inadequate.
- Ventilation holes on the product housing must be kept clear to avoid malfunctions due to high temperatures, abnormal operation, shortened life, and fire.
- Please strictly follow the instructions in this manual; failure to do so may damage the product's protective devices.

- Do not use the instrument if it is found damaged or deformed upon opening the package.
- Prevent dust, wire end, iron fines, or other objects from entering the instrument during installation, as this may cause abnormal operation or failure.
- During operation, to modify the configuration, signal output, startup, stop, and operation safety shall be fully considered. Improper operation may lead to failure and even destruction of the instrument and control equipment.
- Each part of the instrument has a certain service life, which must be maintained and repaired on a regular basis for long-term use.
- If the product comes to the end of its service life, it should be disposed of as industrial waste as a way of environmental protection.
- Disconnect the instrument when it is not in use.
- If you find smoke from the product, smell odor, abnormal noise, etc., please turn off the power switch immediately and contact the company in time.

Disclaimer

- The company does not make any guarantees for the terms beyond the scope of this product warranty.
- This company is not responsible for damage to the instrument, loss of parts, or unpredictable damage caused directly or indirectly by improper operation of the user.

No.	Name	Quantity	Note
1	Compact electromagnetic flowmeter	1	
2	Infrared remote controller	1	
3	User manual	1	
4	Certificate	1	
5	Test report	1	

After opening the box, please confirm the scope of delivery before starting the operation. If you find that the model and quantity are incorrect or there is physical damage to the product's appearance, please contact us.

Contents

1. Introduction 1

1.1. Overview 1

1.2. Measuring Principle 1

1.3. Features 2

2. Technical Parameters 4

3. Structure and Dimensions 6

3.1. Product Size 6

3.2. Dimensions 6

3.3. Material 8

4. Installation 9

4.1. Installation Tips 9

4.2. Installation Requirements 9

4.3. Pipeline Design 9

4.4. Installation Requirements 13

4.5. Mechanical Construction 14

5. Electrical Connection 16

5.1. Current Output Wiring 16

5.2. RS485 Grounding Wire 17

6. Operation 18

6.1. Display and Operation Unit 18

6.2. Menu Lists 19

6.3. Operation Description 20

6.4. Zeroing 30

7. Fault Analysis and Troubleshooting 31

8. Warranty & After-Sales Service 32

Appendix A Flow Rate& Flow Velocity Reference Table 33

Appendix B Communication 34

B.1 Physical Interface 34

B.2 Register Address 34

B.3 Data Parsing Method 35

B.4 Communication Example 39

1. Introduction

1.1. Overview

The compact electromagnetic flowmeter (also magmeter, mentioned as magmeter in the following content) integrates the traditional magmeter's transmitter and sensor into a single unit. With its compact design and flexible installation, it features an infrared remote control for easy commissioning and mounting. Widely used across various industries, it measures the volumetric flow rate of conductive liquids with a conductivity greater than 2μS/cm. This inductive instrument is specifically designed for measuring the volumetric flow of conductive media.

Standard: JB/T9428-2015-Electromagnetic flow sensors

1.2. Measuring Principle

The electromagnetic flowmeter (also magmeter) adopts an advanced low-frequency square wave excitation design, and its working principle is based on Faraday's law of electromagnetic induction. Two electromagnetic coils at the upper and lower ends generate a constant or alternating magnetic field. When the conductive medium flows through the magmeter, the induced electromotive force (E) can be detected between the left and right electrodes on the flowmeter tube wall.

The magnitude of induced electromotive force (voltage) is proportional to the velocity (V) of the conducive flow, the density of the magnetic field(B), and the electrode spacing(D). The volumetric flow can be determined by calculation, and the formula of the induced electromotive force for calculation is:

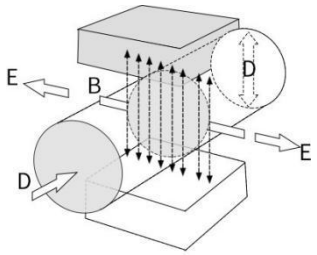

Fig.1

$$E=K\times B\times V\times D$$

Where: E—Induced electromotive force

K—Meter Tube Constant

B—Magnetic Flux Density

V—Average Flow Velocity

D—Electrode Spacing

When measuring the volumetric flow, conductive flow passes through a magnetic field that is perpendicular to the flow direction. This induces an electric potential proportional to the average flow velocity. Therefore, the conductivity of the measured flow is required to be higher than the minimum conductivity required by the meter. The induced voltage signal is detected by two electrodes, and transmitted to the converter via coils. After a series of analog and digital signal processing, the totalized flow and instantaneous flow are displayed on the converter's screen.

1.3. Features

- **Fluid Property Immunity**: Unaffected by changes in fluid density, viscosity, temperature, pressure, and conductivity.
- **Temperature Monitoring**: Built-in measurement with signal output.Features temperature measurement and signal output.
- **Single-Mold Structure:** The electrode and liner are formed in a single molding process, ensuring excellent stability and reliability.
- **Digital Processing:** With fully digital processing, it offers enhanced anti-interference capability, reliable measurement, high accuracy, and a broad flow measurement range.

- **Wide Voltage Range:** Ultra-low EMI power supply allows for a wide input voltage range and strong EMI resistance.
- **High-performance Processor**: Equipped with an ARM Cortex-M4 32-bit processor and a 24-bit ADC data acquisition system, delivering high-speed computation, high precision, low-power operation, and improved flow measurement stability through low-frequency rectangular wave excitation with programmable excitation frequency.
- **Reliable Circuit Design:** Uses SMD components and surface-mount (SMT) technology for enhanced circuit reliability.
- **Customizable Range:** The measurement range can be modified online according to user requirements.
- **OLED Display**: High-resolution OLED display with Chinese and English menu options for easy operation and user-friendly experience.
- **Functions:** Built-in self-check and self-diagnostic functions.
- **Flow Data Tracking:**Three internal counters separately display forward cumulative flow, reverse cumulative flow, and total cumulative flow.
- **Durable Liner:** PEEK liner, supports negative pressure conditions.
- **Remote Operation:** Infrared handheld operator with a 38 kHz communication rate enables remote, non-contact operation.

2. Technical Parameters

Table 1

Input		
Measured Variables	Direct measurement variable: flow rate Calculated value of measured variable: volumetric flow	
Nominal diameter	DN6 ~ DN65	
Measurement range	See Table 2	
Output		
Transmitter output	(4 ~ 20) mA, output load ≤ 500Ω	
Communication output	RS485 interface	MODBUS-RTU communication protocol
Power supply		
Power Supply	(18-36) VDC	
Power consumption	< 5W	
Electrical interface	M12-4 core connector	
Performance parameters		
Accuracy	±0.5%	
Repeatability	≤0.16%	
Process Conditions		
Medium temperature	0℃~80℃	
Process pressure	-0.1 MPa ~ 4.0MPa	
Electrical conductivity	≥ 2 μS/cm	
Environmental conditions		
Ambient temperature	-20℃~60℃	
Storage temperature	-25℃～85℃	
Relative humidity	5%～95%	
Level of protection	IP67	

Table 2 Flow Range

Nominal diameter	Flow Range
DN6	0.03 m^3/h ~ 0.6 m^3/h
DN10	0.1 m^3/h ~ 2 m^3/h
DN15	0.2 m^3/h ~ 4 m^3/h
DN20	0.4 m^3/h ~ 5m^3/h
DN25	0.6 m^3/h ~ 12m^3/h
DN32	1 m^3/h ~ 15 m^3/h
DN40	1 m $^3/h$ ~ 20 m^3/h
DN50	1.5 m^3/h ~ 30 m^3/h
DN65	1.5 m^3/h ~ 30 m^3/h

3. Structure and Dimensions

3.1. Product Size

The sensor and converter of the magmeter are integrated into one unit and operated by an infrared remote control.

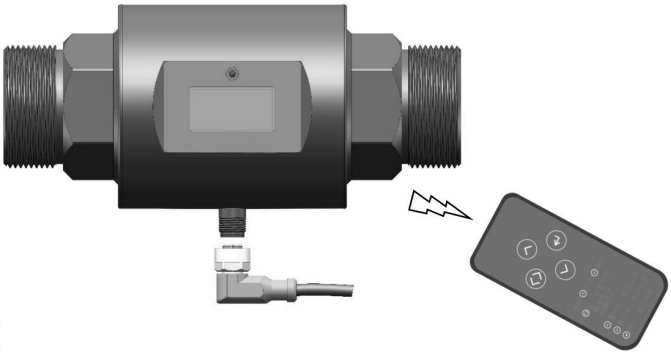

Fig.2 Product diagram

3.2. Dimensions

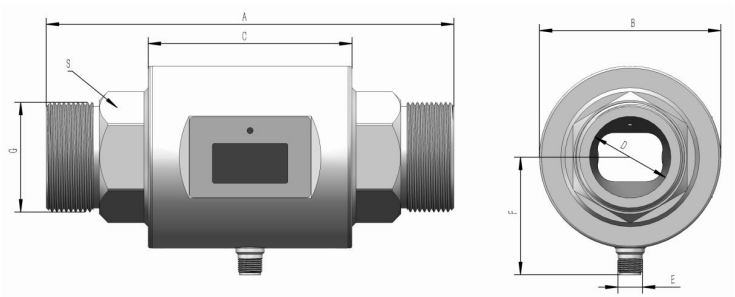

Fig.3 Threaded connection (G thread)

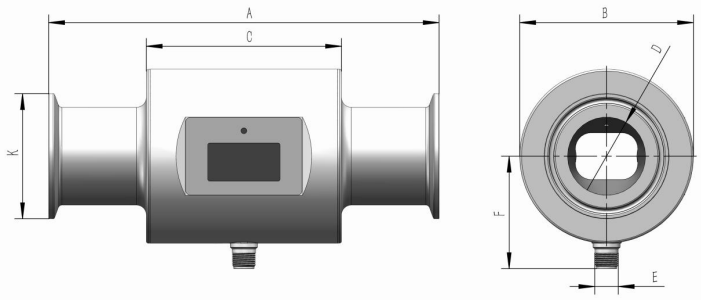

Fig.4 Clamp connection (ISO2852 Clamp)

Table 3 Dimensions of threaded and clamp-connected magmeter

DN	A (mm)	B (mm)	C (mm)	D (mm)	E (mm)	F (mm)	G (Thread) (mm)	K (Clamp) (mm)	S (mm)
6	150	70	90	6	M12×1	48	G1/2 or NPT 1/4	50.5	14
10	150	70	90	10	M12×1	48	G1/2 or NPT 3/8	50.5	17
15	150	70	90	15	M12×1	48	G3/4	50.5	27
20	150	70	90	20	M12×1	48	G3/4	50.5	27
25	150	76	90	25	M12×1	51	G1	50.5	36
32	150	76	90	32	M12×1	51	G1-1/4	50.5	42
40	200	89	100	40	M12×1	57.5	G1-3/4	64	56
50	200	95	100	50	M12×1	60.5	G2	77.5	60
65	200	95	100	65	M12×1	60.5	G2-3/4	91	80

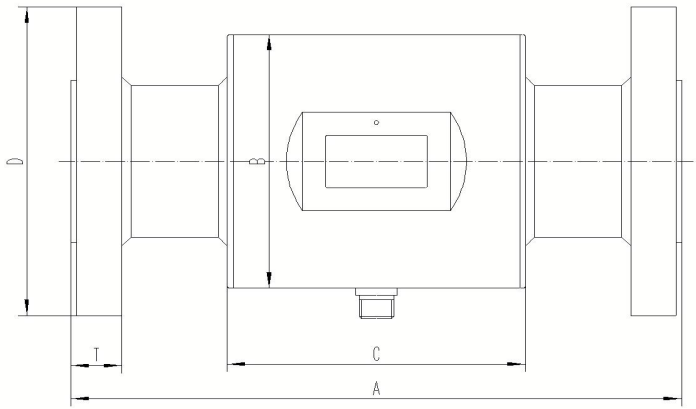

Fig.5 Flange-connected type (HG/T20592)

Table 4 Dimensions of flange-connected magmeter

DN	A (mm)	B (mm)	C (mm)	D (mm)	T (mm)
6	200	φ70	90	φ90	14
10	200	φ70	90	φ90	14
15	200	φ70	90	φ95	14
20	200	φ70	90	φ105	16
25	200	φ76	90	φ115	16
32	200	φ76	90	φ140	18
40	200	φ89	100	φ150	18
50	200	φ95	100	φ165	19
65	200	φ95	100	φ185	20

3.3. Material

Body: 304SS or 316LSS

Electrode: 316LSS

Liner: PEEK

4. Installation

4.1. Installation Tips

Note!

Please inspect the packaging box for any damage or signs of rough handling. If there is any damage, report it to the delivery personnel, the manufacturer, or the instrument supplier.

Note!

Please check the packing list to make sure the items you received are complete.

Note!

Please inspect the nameplate on the instrument to confirm that the supplied items match your order. Verify that the power supply information on the nameplate is correct. If it is incorrect, contact the manufacturer or the instrument supplier.

Note!

The installation diagram is for reference only; Please refer to the actual product.

4.2. Installation Requirements

Caution:

To ensure reliable installation, the following measures must be taken:

(1) Leave sufficient space on the sides.

(2) Shield the meter from strong vibrations

4.3. Pipeline Design

The following items shall be considered when designing the pipelines.

(1) Location

① Where is dry and well-ventilated, without water pooling.

② Where avoids exposure to direct sunlight and rain. When installed outdoors, it shall be equipped with a weather protection cover.

③ Where there is less significant change in temperature or no temperature

radiance; insulating and ventilated measures should be taken if necessary.

④ Where is free of aggressive gas; ventilated and anti-corrosion measures should be taken if necessary.

⑤ Where avoids strong vibration; a pipe fastener beside the meter is needed in the case of strong pipe vibration.

(2) Avoid Magnetic Interference

The flowmeter should not be installed near devices that generate significant electromagnetic interference, such as electric motors, transformers, or other power equipment. It should also not be installed near variable frequency drives (VFDs) or powered from a VFD switchboard to avoid interference.

(3) The Length of Straight Runs

For measurement accuracy, the recommended length of the straight run upstream of the sensor should be at least 5 times of pipe diameters (5D), while 10×DN is preferred. The downstream straight pipe section should be at least 2 times the pipe diameter (2D), measured starting from the electrode axis.

To further mitigate the effects of vortices and flow field distortions, the length of the upstream and downstream straight pipe sections can be increased, or a flow straightener can be installed. If there are flow-disturbing components such as valves, elbows, T-sections and pumps upstream of the flowmeter, the length of the upstream straight pipe section should be greater than 10 x DN. Zero setting is generally not required for the flowmeter. However, for verification, zero flow should be established in a fully filled measuring tube, which requires the installation of a shut-off valve downstream of the flowmeter.

For mixed media consisting of different liquids, the flowmeter should be installed either upstream of the mixing point or at a suitable distance downstream, with a minimum distance of 30 x DN. Otherwise, unstable readings may occur. The following are common pipeline installation examples:

Table 5 Common pipeline installation conditions

Pipe restriction types	Installation conditions	
	Inlet section	Outlet section
Standard	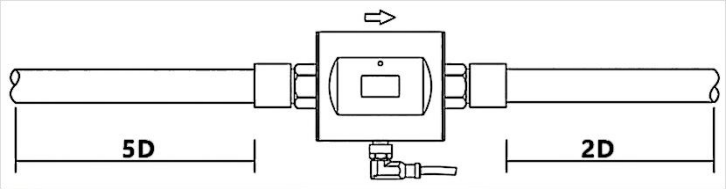	
Pipe reducer	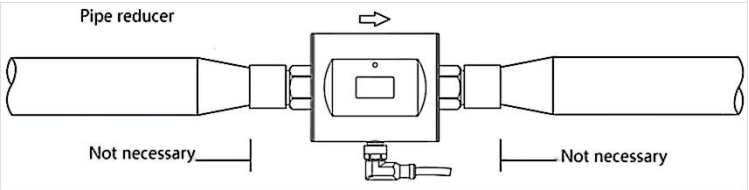	
Fully open valve	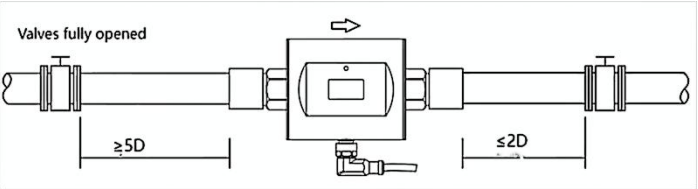	

Pipe restriction types	Installation conditions	
	Inlet section	Outlet section
90 ° bend	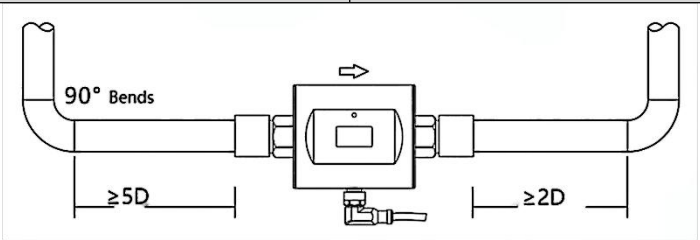	
Pipe expander	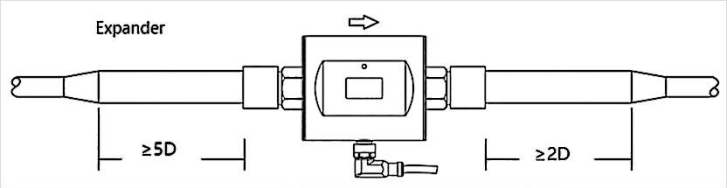	
Various valves	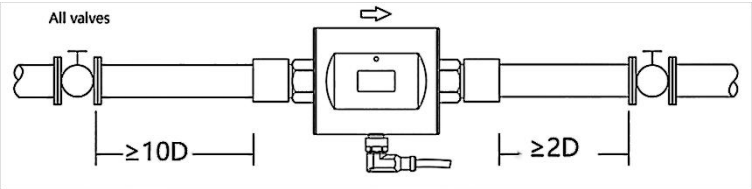	

4.4. Installation Requirements

(1) **Flow Direction**

The flowmeter can be set to automatically detect the forward and reverse flow direction. The flow direction arrow on the sensor body indicates the manufacturer's designated forward flow direction. Generally, when installing the meter, the flow direction arrow should align with the process flow direction. The pipe should be fully filled during operation; otherwise its measurement accuracy may be compromised.

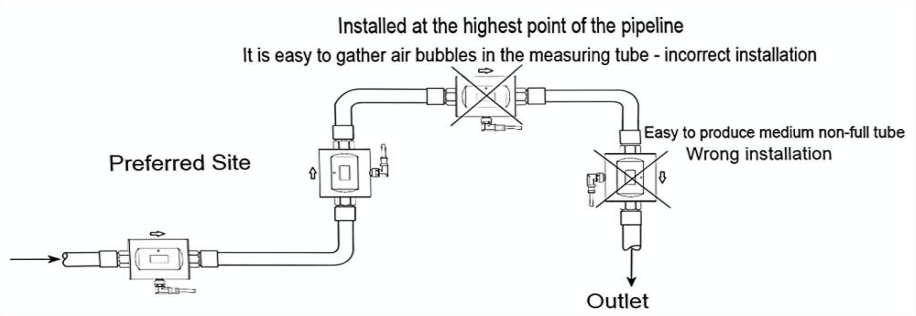

(2) For pipes with free inlet and outlet, the flowmeter shall be installed at the bottom section (lower part of the pipe).

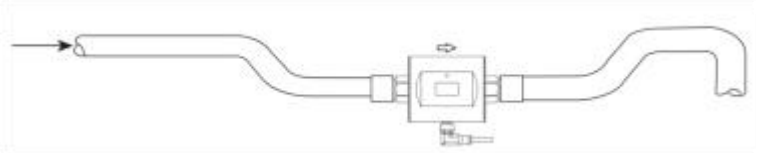

Fig.7

(3) Horizontal installation: mounting in a slightly uprising pipe section, see the following figure:

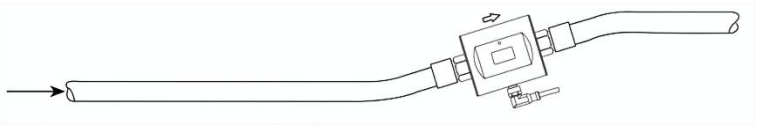

Fig.8

(4) Pump: mounting on the side of the pump suction side of the pump (can be used under vacuum and negative pressure), as shown in the figure below.

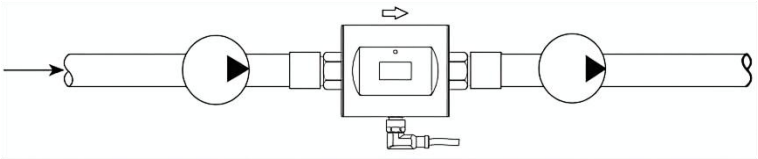

Fig.9

(5) Long pipelines: mounting a control valve and a shut-off valve downstream of the flowmeter, as shown in the figure below.

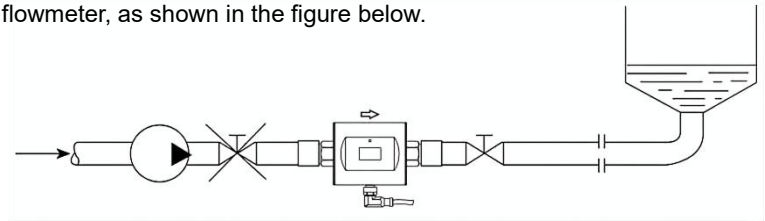

Fig.10

4.5. Mechanical Construction

4.5.1. Pipeline Installation

(1) Prior to installation, the pipeline shall be calibrated to ensure that the pipe is well-aligned with the pipeline.

(2) In general, newly installed pipelines may contain foreign objects (such as welding slag). Before the installation, flush out the debris. It not only prevents the lining from being damaged but also measurement errors caused by foreign particles passing through the flow tube during measurement.

4.5.2. Meter Installation

(1) Flow direction

The direction of the flow to be measured shall match the arrow direction marked on the meter.

(2) When welding or flame-cutting the pipe adjacent to the flowmeter, insulating measures should be taken to prevent the liner from being deformed by heat.

(3) Bolts and Nuts: for easy installation, sufficient space shall be reserved near the pipe flange.

(4) If the temperature of the medium to be measured or climate temperature

exceeds 50 ℃, protection measures against overheating of the shell should be taken during installation to avoid touching burns.

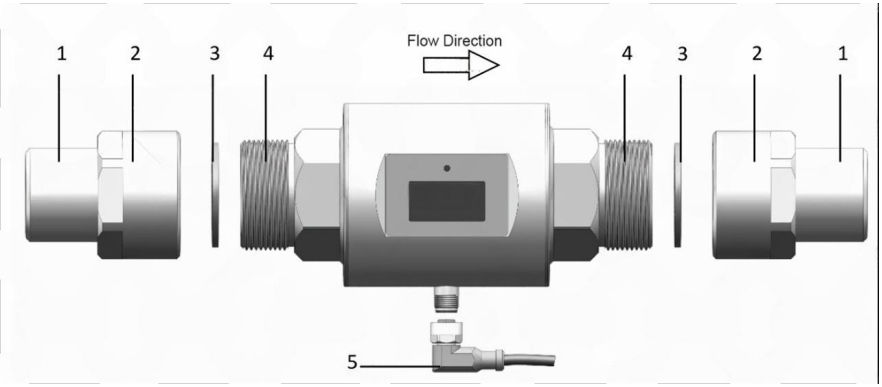

Fig.11 Flowmeter installation diagram

1 Pipeline

2 Mounting nut

3 Seal

4 Flowmeter process connection

5 M12 electrical connection cable

5. Electrical Connection

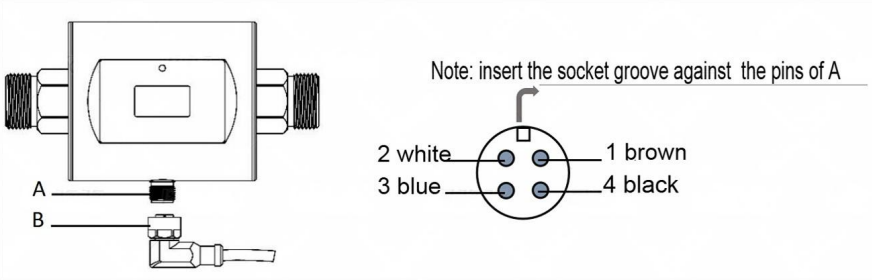

A: M12 4 pin plug

B: Socket

5.1. Current Output Wiring

Pin No.	Color	Description
1	Brown	Connect U+ 24V
2	White	Flow (4 ~ 20) mA
3	Blue	GND/connect to U- 24V
4	Black	Temperature (4 ~ 20) mA
Shielded layer		Grounding wire

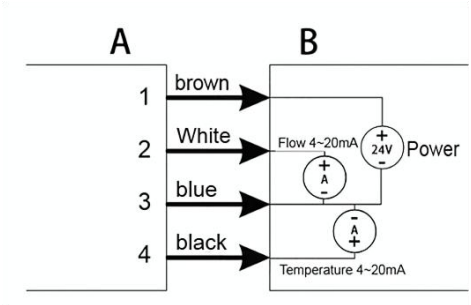

5.2. RS485 Grounding Wire

Pin No.	Color	Description
1	Brown	Connect U+ 24V
2	White	Flow (4 ~ 20) mA
3	Blue	GND/connect to U- 24V
4	Black	RS485 B
Shielded layer		Grounding wire

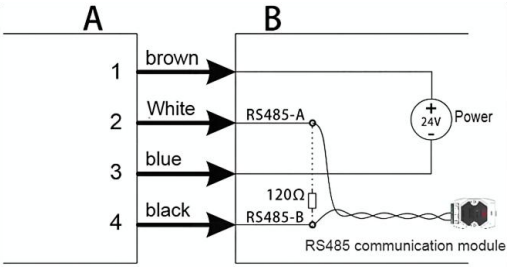

6. Operation

6.1. Display and Operation Unit

6.1.1. Infrared Remote Control Operation

The meter is operated by an infrared remote control

Fig.12 Infrared remote control panel

Table 6 Key description

Symbols	Keys	Function
+	Unlock key	● Press first , then press again to unlock
	Up key	● Increase digits or navigate up in the menu
	Left button	● Enter parameter modification mode ● Shift digits ● Confirm parameters.
	Down key	● Decrease digits or navigate down in the menu
	Right click	● Enter the password input interface. ● Exit the menu.

6.1.2. Display

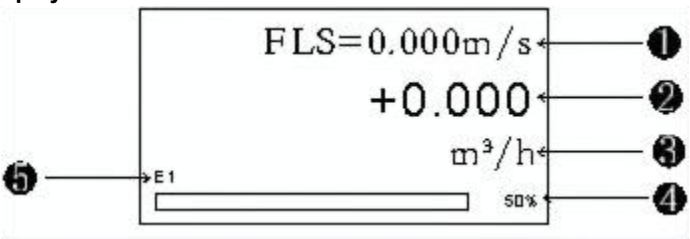

Fig.13 Home page

Table 7 Interface Description

No.	Description
①	Instantaneous flow rate (press the up and down keys of the infrared controller to switch and display instantaneous flow rate FLS = XXX, forward cumulative flow + XXX, reverse cumulative flow-XXX, mixed flow D-XXX)
②	Instantaneous flow rate
③	Instantaneous flow unit
④	Instantaneous flow rate as a percentage of the flow range
⑤	Alarm indication, E1 is empty pipe alarm, E2 is range over-limit alarm, E3 is excitation alarm

6.2. Menu Lists

Parameter setting password: 0018. The parameter list is as follows

Table 8 Menu list

No.	Items	Setting method	Parameter description
1	Clear total flow	Select	Forward flow clear, reverse flow clear, mixed flow clear, all clear
2	Sensor size	Select	2mm ~ 3000mm
3	Liquid density	Setting	0.000 g/cm³ ~ 99.000 g/cm³

No.	Items	Setting method	Parameter description
4	Flow unit	Select	m^3/s, m^3/min, m^3/h, L/s, L/min, L/h, kg/s, kg/min, kg/h
5	Total unit	Select	0.001 m^3 to 1 m^3, 0.001 L to 1 L, 0.001 kg ~ 1kg
6	Flow span	Setting	Settable: 0 ~ 9999
7	Meter factor	Setting	0～9.999
8	Damping time	Setting	0s ~ 99s
9	Alm Emp Pipe	Setting	EDP threshold settable: 0 ~ 9999
10	Flow direction	Select	Forward, reverse
11	REV Enabled	Select	ON/OFF
12	Zero voltage	Factory setting	When the process flow rate is zero, set the zero point of the flowmeter
13	Flow cutoff	Setting	00.0%～99.9%
14	PEAK Enabled	Select	ON/OFF
15	T factor	Setting	0.000～9.99
16	Communication	Select	IOUT, MODBU
17	Bus address	Setting	Set the communication address, 0 ~ 25
18	Baud rate	Choose	9600, 19200, 38400, 57600, 115200, 1200, 2200, 2400, 480
19	Show Dir	Choose	Set the display direction, 0°, 90°, 180°, 270°
20	Language	Choose	Chinese, English
21	T Span Zero	Setting	-50℃～120
22	T Span Full	Setting	-50℃～120
23	Versions		Software/hardware

6.3. Operation Description

(1) Clear total flow setting:

Press the **right key** to enter the password input interface. Use the **left key** to navigate between parameters, the **up key** to increase digits, and the **down key** to decrease digits. Enter the password **0018**, then press the **left key** to access the

menu. Use the **left key** to select the **[Clear Total Flow]** menu, entering the reset type selection interface. Use **up/down keys** to choose the reset type, then press the **left key** to confirm. This brings up the final confirmation screen; pressing the left key again completes the reset process. Once the reset is complete, press the right key to exit the menu.

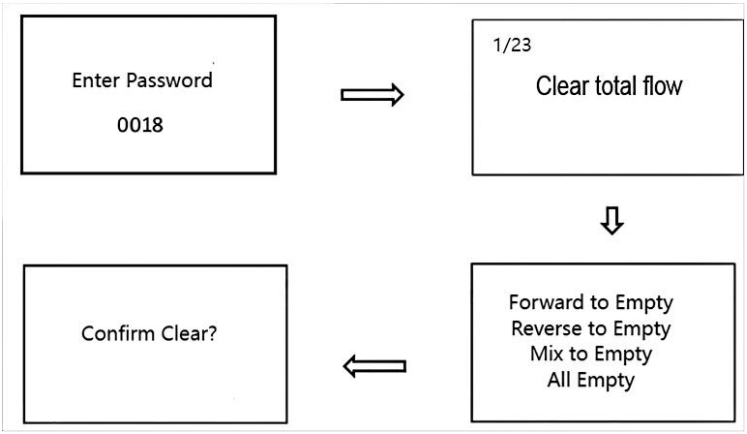

Fig.14 Flow clear setting

(2) Sensor size setting:

Press the **right key** to enter the password input interface. Use the **left key** to shift parameters, the **up key** to increase digits, and the **down key** to decrease digits. Enter the password **0018**, then press the **left key** to access the menu. Use the **up/down keys** to select the **[Sensor Size]** menu, then press the **left key** to enter the pipe diameter selection interface. Use the **up/down keys** to choose the required sensor size, then press the **left key** to complete the setting.

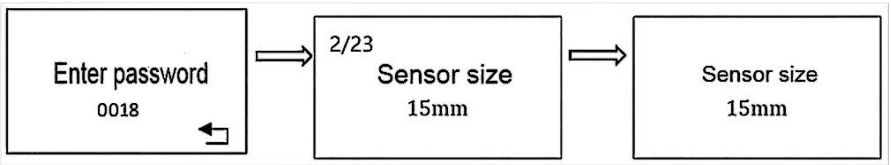

Fig.15 Sensor size settings

(3) Liquid density setting

Press the **right key** to enter the password input interface. Use the **left key** to shift

parameters and the **up/down keys** to adjust values. Enter the password **0018**, then press the **left key** to access the menu. Use the **up/down keys** to select the **[Liquid Density]** menu, then press the **left key** to enter the liquid density setting interface. Use the **up/down keys** to adjust the liquid density, use the **left key** to shift digits, and finally, press the **left key** to complete the setting.

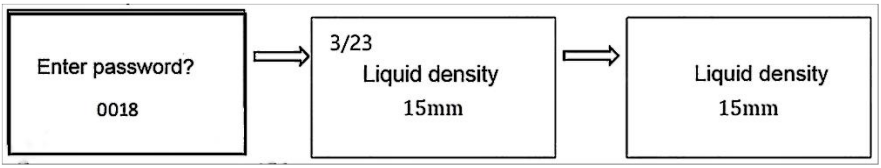

Fig.16 Liquid density setting

(4) Flow unit setting

Press the **right key** to enter the password input interface. Use the **left key** to shift parameters, the **up key** to increase digits, and the **down key** to decrease digits. Enter the password **0018**, then press the **left key** to access the menu. Use the **up/down keys** to select the **[Flow Unit]** menu, then press the **left key** to enter the instantaneous flow unit selection interface. Use the **up/down keys** to choose the desired instantaneous flow unit, then press the **left key** to complete the setting.

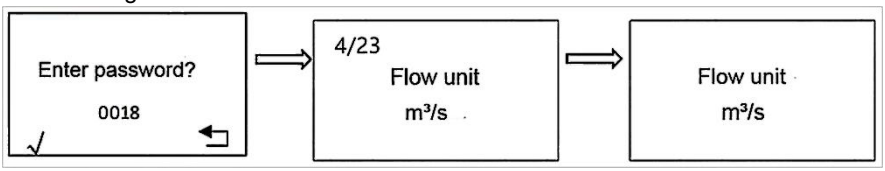

Fig.17 Flow unit

(5) Total unit setting

Press the **right key** to enter the password input interface. Use the **left key** to shift parameters, the **up key** to increase digits, and the **down key** to decrease digits. Enter the password **0018**, then press the **left key** to access the menu. Use the **up/down keys** to select the **[Total Unit]** menu, then press the **left key** to enter the total flow unit selection interface. Use the **up/down keys** to choose the required total flow unit, then press the **left key** to complete the setting.

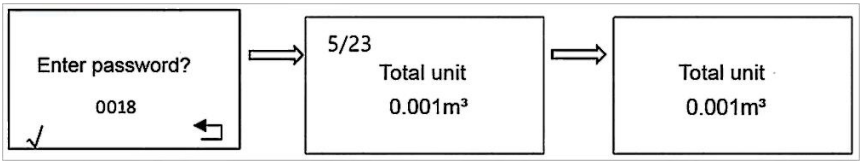

Fig.18 Total unit

(6) Flow span setting

Press the **right key** to enter the password input interface. Use the **left key** to navigate between parameters, the **up key** to increase digits, and the **down key** to decrease digits. Enter the password **0018**, then press the **left key** to access the menu. Use the **up/down keys** to select the **[Flow span]** menu, then press the **left key** to enter the instrument range selection interface. Use the **up/down keys** to input the required instrument range, then press the **left key** to complete the setting.

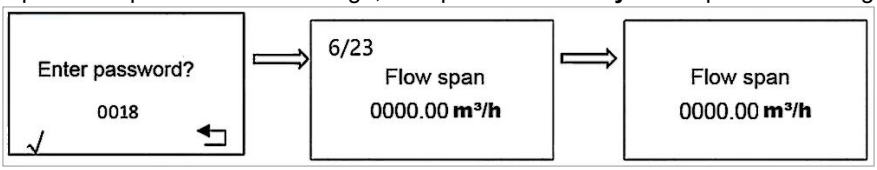

Fig.19 Flow span

(7) Meter factor setting

Press the **right key** to enter the password input interface. Use the **left key** to shift parameters, the **up key** to increase digits, and the **down key** to decrease digits. Enter the password **0018**, then press the **left key** to access the menu. Use the **up/down keys** to select the **[Meter factor]** menu, then press the **left key** to enter the instrument coefficient selection interface. Use the **up/down keys** to input the required instrument coefficient, then press the **left key** to complete the setting.

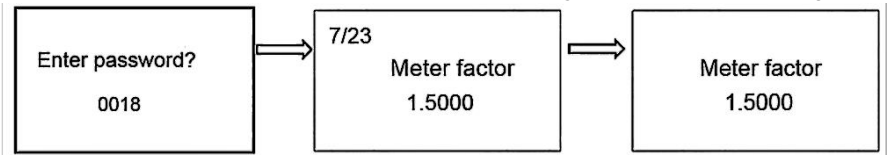

Fig.20 Meter factor

(8) Damping time setting

Press the **right key** to enter the password input interface. Use the **left key** to shift parameters, the **up key** to increase digits, and the **down key** to decrease digits. Enter the password **0018**, then press the **left key** to access the menu. Use the **up/down keys** to select the **[Damping Time]** menu, then press the **left key** to enter the output damping time selection interface. Use the **up/down keys** to input the required output damping time, then press the **left key** to complete the setting.

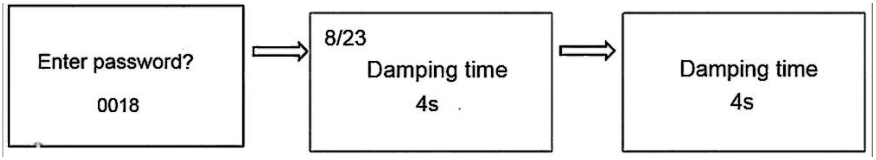

Fig.21 Damping time

(9) Alm emp pipe setting

Press the **right key** to enter the password input interface. Use the **left key** to shift parameters, the **up key** to increase digits, and the **down key** to decrease digits. Enter the password **0018**, then press the **left key** to access the menu. Use the **up/down keys** to select the **[Alm Emp Pipe]** menu, then press the **left key** to enter the empty pipe detection threshold selection interface. Use the **up/down keys** to input the required empty pipe detection threshold, then press the **left key** to complete the setting.

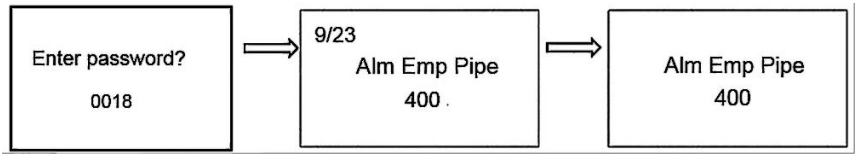

Fig.22 Empty pipe alarm threshold

(10) Flow direction setting

Press the **right key** to enter the password input interface. Use the **left key** to shift parameters, the **up key** to increase digits, and the **down key** to decrease digits. Enter the password **0018**, then press the **left key** to access the menu. Use the **up/down keys** to select the **[Flow Direction]** menu, then press the **left key** to

enter the flow direction selection interface. Use the **up/down keys** to choose either **"Forward"** or **"Reverse"**, then press the **left key** to complete the setting.

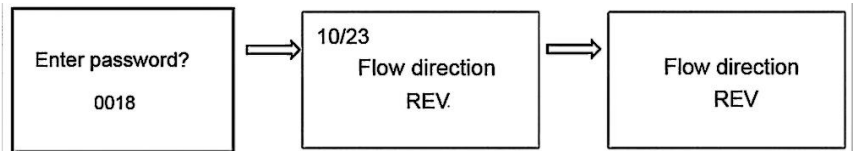

Fig.23 Flow direction

(11) REV enabled setting

Press the right button to enter the password input interface. Use the left button to shift parameters, the up button to increase digits, and the down button to decrease digits. Enter the password **0018**. After entering the menu with the left button, use the up and down buttons to select the **[REV Enabled]** menu. Press the left button to enter the selection interface, use the up and down buttons to choose between **"Enable"** or **"Disable"**, and press the left button to confirm the setting.

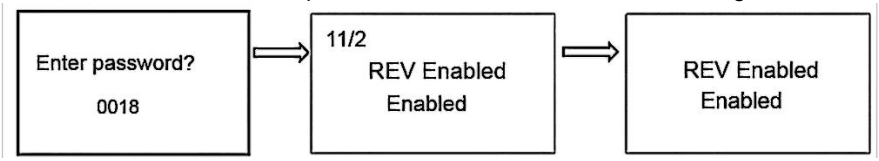

Fig.24 REV Enabled

(12) Zero voltage setting

Press the **right key** to enter the password input interface. Use the **left key** to shift parameters, the **up key** to increase digits, and the **down key** to decrease digits. Enter the password **0018**, then press the **left key** to access the menu. Use the **up/down keys** to select the **[Zero Voltage]** menu, then press the **left key** to enter the zero voltage selection interface. Use the **up/down keys** to input the required zero voltage, then press the **left key** to complete the setting.

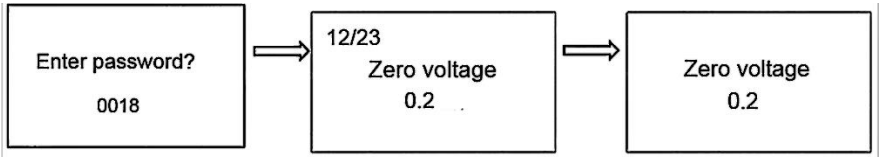

Fig.25 Zero voltage

(13) Flow cutoff setting

Press the right button to enter the password input interface. Press the left button to shift the parameters. The up button increases the digits, while the down button decreases them. Enter the password **0018**, then press the left button to enter the menu. Use the up/down buttons to select **[Low Flow Cutoff]**, press the left button to enter the selection interface, use the up/down buttons to input the desired low flow cutoff value, and finally, press the left button to complete the setting.

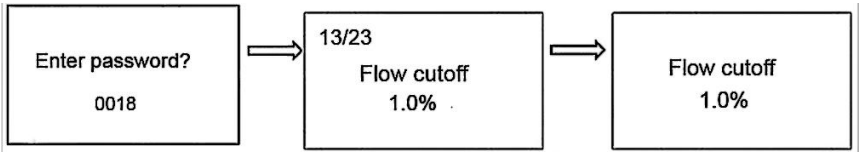

Fig.26 Flow cutoff

(14) PEAK enabled setting

Press the right button to enter the password input interface. Press the left button to shift the parameters. The up button increases the digits, while the down button decreases them. Enter the password **0018**, then press the left button to enter the menu. Use the up/down buttons to select **[PEAK Enabled]**, press the left button to enter the selection interface, and use the up/down buttons to choose between **"Enable"** and **"Disable"**. Finally, press the left button to complete the setting. If **"Enable"** is selected, two additional menus—**"PEAK factor"** and **"PEAK time"**—will appear.

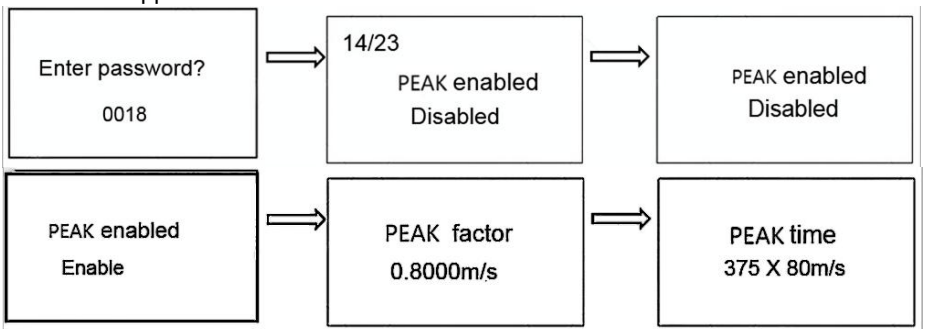

Fig.27 PEAK enabled

(15) T factor setting

Press the right button to enter the password input interface. Press the left button to shift parameters. The up button increases the digits, while the down button decreases them. Enter the password **0018**, then press the left button to enter the menu. Use the up/down buttons to select **[Temperature Coefficient]**, press the left button to enter the selection interface, use the up/down buttons to input the desired temperature coefficient, and finally, press the left button to complete the setting**.**

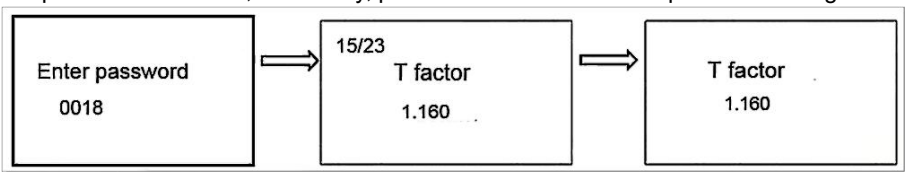

Fig.28 T factor

(16) Communication setting

Press the right button to enter the password input interface. Use the left button to shift parameters, the up button to increase digits, and the down button to decrease digits. Enter the password **0018**. After entering the menu with the left button, use the up and down buttons to select the [**Communication**] Mode menu. Press the left button to enter the selection interface, use the up and down buttons to choose the required communication mode, and press the left button to confirm the setting.

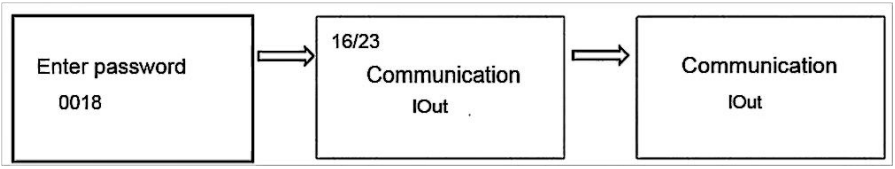

Fig.29 Communication

(17) Bus address setting

Press the right button to enter the password input interface. Use the left button to shift parameters, the up button to increase digits, and the down button to decrease digits. Enter the password **0018**. After entering the menu with the left button, use the up and down buttons to select the **[Bus Address]** menu. Press the left button to enter the selection interface, use the up and down buttons to input the required

bus address, and press the left button to confirm the setting.

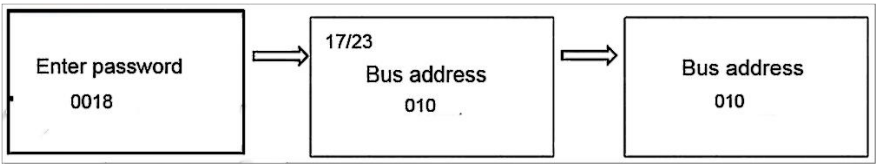

Fig.30 Bus address

(18) Baud rate setting

Press the right button to enter the password input interface. Use the left button to shift parameters, the up button to increase digits, and the down button to decrease digits. Enter the password **0018**. After entering the menu with the left button, use the up and down buttons to select the **[Baud Rate]** menu. Press the left button to enter the selection interface, use the up and down buttons to input the required baud rate, and press the left button to confirm the setting.

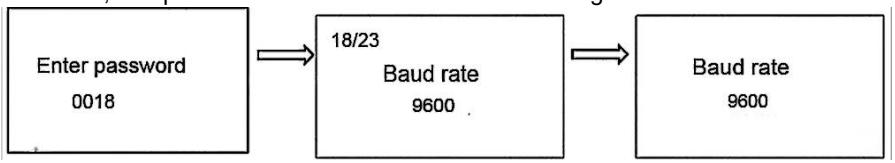

Fig.31 Baud rate

(19) Show Dir setting

Press the right button to enter the password input interface. Use the left button to shift parameters, the up button to increase digits, and the down button to decrease digits. Enter the password **0018**. After entering the menu with the left button, use the up and down buttons to select the **[Show Dir]** menu. Press the left button to enter the selection interface, use the up and down buttons to select the required display orientation, and press the left button to confirm the setting.

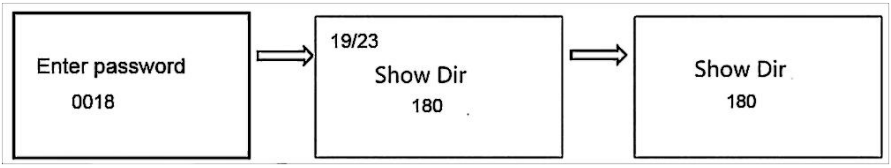

Fig.32 Display angle

(20) Language setting

To set the **Language**, press the right button to enter the password input interface, then press the left button to shift parameters. Use the up button to increase numbers and the down button to decrease numbers. Enter the password **0018**, press the left button to access the menu, use the up/down buttons to navigate to the **Language** menu, and press the left button to enter the [**Language]** interface. Select the desired language using the up/down buttons, then press the left button to complete the setting.

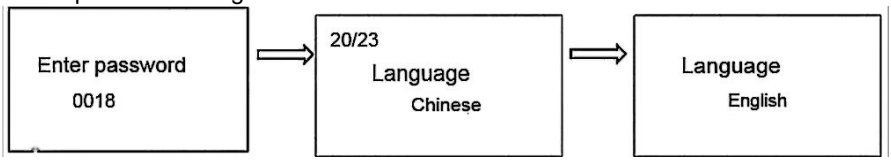

Fig.33 Language

(21) T span zero setting

To set the **T Span Zero**, follow the same initial steps to enter the password input interface, shift parameters, and input the password **0018**. After entering the menu, navigate to the **[T span zero]** menu using the up/down buttons, press the left button to enter the setting interface, and input the required zero point value using the up/down buttons. Press the left button to complete the setting.

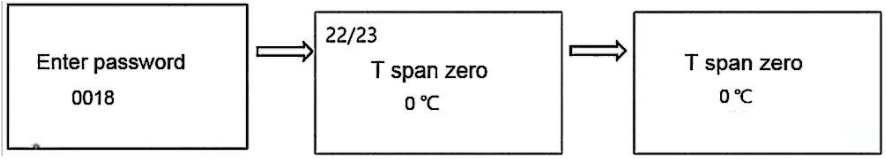

Fig.34 T span zero

(22) T span full setting

For **T Span Full**, repeat the previous steps to access the menu, then navigate to the [**T span Full]** menu. Press the left button to enter the setting interface, input the required full-scale value using the up/down buttons, and press the left button to save the setting.

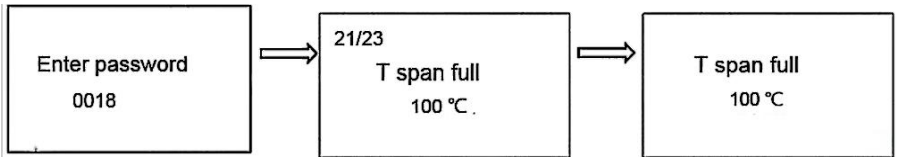

Fig.35 T span full

(23) Versions setting

To **view the instrument version information**, follow the same steps to enter the menu, then navigate to the **Version Information** menu using the up/down buttons. The instrument's software and hardware version details can be viewed in this menu.

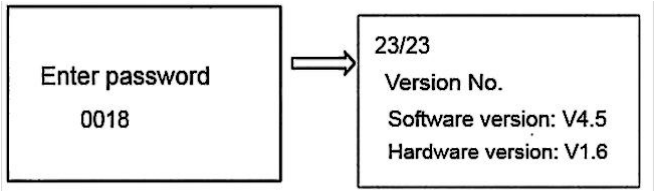

Fig.36 Version

6.4. Zeroing

Zeroing function ensures a 0% output (4 mA) under zero-flow conditions. Although the flowmeter has been zeroe-adjusted at the factory prior to shipment, re-zeroing is required after pipeline installation to match the electromagnetic flowmeter to the actual operating conditions.

Precautions:

- Zeroing is performed before starting the flowmeter. Please note, no setting and updating operation are allowed during zeroing time (about 30 seconds).
- Users is required to fill the sensor with fluid to be measured and ensure that zeroing never performed before valves are fully closed and the fluid rate is absolutely zero.
- Zero adjustment must be repeated whenever the measured fluid is changed.

7. Fault Analysis and Troubleshooting

Table 9

Troubles	Troubleshooting
No display	Check whether the power is connected
	Confirm whether supply voltage meets requirements
Empty pipe alarm	Ensure the fluids completely fills the sensor measuring tube
	Check whether sensor electrodes are functioning properly
Inaccurate measured flowrate	Ensure that the fluid completely fills the sensor measuring tube
Remote control button failure	If the remote control does not respond when aimed at the infrared receiver, the button cell inside the remote control may be running low. Open the remote control and measure the button cell voltage. If it is below 3V, the remote control will abnormally function, and the battery needs to be replaced.

8. Warranty & After-Sales Service

We promise that during the warranty period, any product with quality issues will be covered under our unconditional "Three Guarantees" service, which includes free repair, replacement, or return. All non-customized products are eligible for return or exchange within 7 days (excluding products damaged by misoperation). For customized products, the warranty terms will be based on the agreement specified in the contract.

Disclaimer:

During the warranty period, product malfunction caused by the following reasons are not in the scope of the "Three Guarantees" service:

(1) Product malfunction resulting from improper use by customers.

(2) Quality issues caused by disassembly, repairing, and refitting the product.

Appendix A Flow Rate& Flow Velocity Reference Table

Table 10 Flow rate& Flow Velocity Reference Table

Flow Velocity(m/s) / Flow rate (m^3/h) / DN（mm）	0.1	0.2	0.4	0.5	1	5	10
DN6	0.0101	0.0203	0.0407	0.0509	0.1018	0.5089	1.0178
DN10	0.0283	0.0565	0.1131	0.1414	0.2827	1.4137	2.8274
DN15	0.0636	0.127	0.254	0.318	0.636	3.1809	6.362
DN20	0.113	0.226	0.452	0.565	1.131	5.6549	11.310
DN25	0.176	0.353	0.707	0.884	1.767	8.8357	17.671
DN32	0.290	0.579	1.158	1.448	2.895	14.476	28.953
DN40	0.452	0.905	1.810	2.262	4.524	22.619	45.239
DN50	0.707	1.414	2.827	3.534	7.069	35.343	70.690
DN65	1.195	2.389	4.778	5.973	11.946	59.730	119.46

Appendix B Communication

B.1 Physical Interface

The flowmeter features a standard RS485 communication interface and utilizes the Modbus-RTU protocol. It can acquire parameters such as instantaneous flow rate, instantaneous velocity, and cumulative flow.

B.2 Register Address

The Modbus protocol of the meter uses function code 04 to read data.

The default serial port parameters are: 9600 baud rate, 1-bit start bit, 8-bit data bit, 1-bit stop bit, none-parity.

Table 11 Flowmeter register address table

Protocol Addresses (Decimal)	Protocol Addresses (HEX)	Data Format	Register Definition
4112	0x1010	Float Inverse	Instantaneous flow floating-point indication
4114	0x1012	Float Inverse	Temperature value, unit: °C
4116	0x1014	Float Inverse	Flow percentage floating point indication
4118	0x1016	Double Inverse	Forward flow accumulation
4122	0x101A	Double Inverse	Reverse flow accumulation
4126	0x101E	Double Inverse	Mixed flow accumulation
4130	0x1022	Uint16_tInverse	Alarm status
4131	0x1023	Uint16_tInverse	Instantaneous flow unit, accumulated flow unit
4132	0x1024	Float Inverse	Floating point expression of instantaneous flow rate, unit: m/s

B.3 Data Parsing Method

B.3.1 Instantaneous Flow

Data transmission:

Master Station Command:

Device address	Function code	Address high byte register	Address low byte register	Register length high byte	Register length low byte	CRC low byte	CRC high byte
01	04	10	10	00	02	74	CE

Command received by the master station:

Device address	Function code	Data length	4 bytes floating point (instantaneous flow)				CRC low byte	CRC high byte
01	04	04	C4	1C	60	00	2F	72

Data parsing:

The instantaneous flow data is in Float reverse format, using IEEE754 32-bit floating-point number format, and its structure is as follows:

0X1010 (34113)		0x1011 (34114)	
BYTE1	BYTE2	BYTE3	BYTE4
S EEEEEEEE	E MMMMMMM	MMMMMMM	MMMMMMM

S-sign of mantissa: 1 = negative number, 0 = positive number.

E-Exponent: Represented by the difference from the decimal number 127.

M (Mantissa): The 23-bit fractional part.

When the exponent (E) is neither completely 0 nor completely 1, the conversion between floating-point numbers and decimal values follows this formula:

$$V = (-1)^S 2^{(E-127)}(1+M)$$

From the above formula, the current instantaneous flow rate can be calculated as:

C4	1C	60	00
1100 0100	0001 1100	0110 0000	0000 0000
Byte 1	Byte 2	Byte 3	Byte 4

S = 1; E = 10001000; M = 001 1100 0110 0000 0000 0000;

$$V = (-1)^1 2^{(136-127)}(1+\frac{1}{8}+\frac{1}{16}+\frac{1}{32}+\frac{1}{512}+\frac{1}{1024}) = -625.5$$

Therefore, the instantaneous flow value represented by C4 1C 60 00 is 625.5.

B.3.2 Instantaneous Flow Velocity

Data transmission:

Master Station Command:

Device address	Function code	Address high byte register	Address low byte register	Length high byte register	Length low byte register	CRC low byte	CRC high byte
01	04	10	12	00	02	D5	0E

Master Station Response:

Device address	Function code	Data Length	4 bytes floating point number (Instantaneous flow rate)				CRC low byte	CRC high byte
01	04	04	C1	B0	80	00	A6	5F

Data parsing:

The instantaneous flow velocity data is in Float Inverse format, using IEEE754 32-bit floating point format. The analytical method is consistent with the analytical instantaneous flow rate.

C1 B0 80 00

1100 0001 1011 0000 1111 1000 0000 0000

S = 1; E = 10000011; M = 011 0000 1111 1000 0000 0000;

$$V = (-1)^1 2^{(131-127)}(1+\frac{1}{4}+\frac{1}{8}+\frac{1}{256}) = -22.0625$$

Therefore, the instantaneous flow velocity represented by C1 B0 80 00 is 22. 0625.

Note: All data in Float inverse format can be parsed using the same method as instantaneous flow and instantaneous flow velocity. Specifically, the flow percentage in floating-point representation, fluid conductivity ratio in floating-point representation, decimal parts of forward accumulation values, and decimal parts of reverse accumulation values can be parsed with the methods for instantaneous flow rate. No further explanation will be provided below.

B.3.3 Total Forward Flow

The forward flow total data is in Double Inverse Format, following the IEEE754 64-bit floating-point standard. The structure is as follows:

Data Transmission

Master Station Command:

Device address	Function code	Address high byte register	Address low byte register	Length high byte register	Length low byte register	CRC low byte	CRC high byte
01	04	10	16	00	04	14	CD

Master Station Response:

Device address	Function code	Data length	8 bytes floating point number								CRC low byte	CRC high byte
10	04	08	40	C8	1C	D6	C8	B4	39	58	4F	93

Data parsing:

Assuming that the cumulative unit of flow is m³, the parsed value is: 12345.678 m³

Note: All data in Double Inverse format can be parsed by using the same method as forward flow total data. This include reverse total and mixed flow total data, which will not be further explained here.

B.3.4 Flow Unit

Data Transmission

Master Station Command:

Device address	Function code	Address high byte register	Address low byte register	Length high byte register	Length low byte register	CRC low byte	CRC high byte
01	04	10	13	00	01	34	0C

Master Station Response:

Device address	Function code	Data Length	2-byte integer (Instantaneous Flow Unit)		CRC low byte	CRC high byte
01	04	02	12	10	79	33

Data parsing:

The integer part of forward accumulation data is in Unsigned Short format.

- ◆ Low 8 bits: Accumulated flow unit
- ◆ High 8 bits: Instantaneous flow unit

The meaning of received data is determined by looking up the flow unit table.

① **Instantaneous Flow unit**

Table 12 Instantaneous Flow Unit Table

Code	Instantaneous unit	Code	Instantaneous unit	Code	Instantaneous unit
00xx	L/s	10xx	m3/s	20xx	kg/s
01xx	L/min	11xx	m3/min	21xx	kg /min
02xx	L/h	12xx	m3/h	22xx	kg h

The received data is xx 12, which, according to the table, indicates that the instantaneous flow unit is m^3/h.

② **Accumulated Flow Unit**

Table 13 Accumulated Flow Unit Table

Code	Accumulated unit	Code	Accumulated unit	Code	Accumulated unit
xx00	L	xx10	m^3	xx20	kg
xx01	0.1L	xx11	$0.1m^3$	xx21	0.1kg
xx02	0.01L	xx12	$0.01m^3$	xx22	0.01kg
xx03	0.001L	xx13	$0.001m^3$	xx23	0.001kg

The received data is xx 10, which, according to the table, indicates that the instantaneous flow unit is m^3.

B.3.5 Empty Pipe Alarm

Data Transmission

Master Station Command:

Device address	Function code	Address high byte register	Address low byte register	Length high byte register	Length low byte register	CRC low byte	CRC high byte
01	04	10	24	00	01	75	01

Master Station Response:

Device address	Function code	Data Length	2-byte integer (Instantaneous Flow Unit)		CRC Low position	CRC High position
01	04	02	00	01	78	F0

Data parsing:

The empty pipe alarm data is in Unsigned Short format:

- 1 → Alarm triggered
- 0 → No alarm

In this example, the received data is 00 01, indicating that the flowmeter has triggered an empty pipe alarm.

B.4 Communication Example

Sending Data:

0A 04 10 10 00 16 75 BA

Received data:

0A 04 2C 3F C6 B9 3B 41 D4 31 B1 3E 04 67 38 40 46 99 EA 52 F8 69 79 BF A0 FF 8D 32 D9 16 87 40 46 95 AA 6F AB B3 33 00 00 12 10 3F 60 E8 B8 0A 71

Received data parsing:

0A: Flowmeter communication address

04: Flowmeter function code

2C: Response data length = 44

3F C6 B9 3B: Instantaneous flowrate (float) = 1.552

41 D4 31 B1: Temperature (float) = 26.5

3E 04 67 38: Flow percentage (float) = 0.1293

40 46 99 EA 52 F8 69 79: Forward total (double) = 42

BF A0 FF 8D 32 D9 16 87: Reverse total (double) = 0

40 46 95 AA 6F AB B3 33: Mixed total (double) = 42

00 00: Alarm status = No alarm

12 10: Instantaneous unit = m^3/h, Total unit = m^3

3F 60 E8 B8: Instantaneous velocity (float) = 0.878

0A 71: CRC checksum